SECTION (1:25)

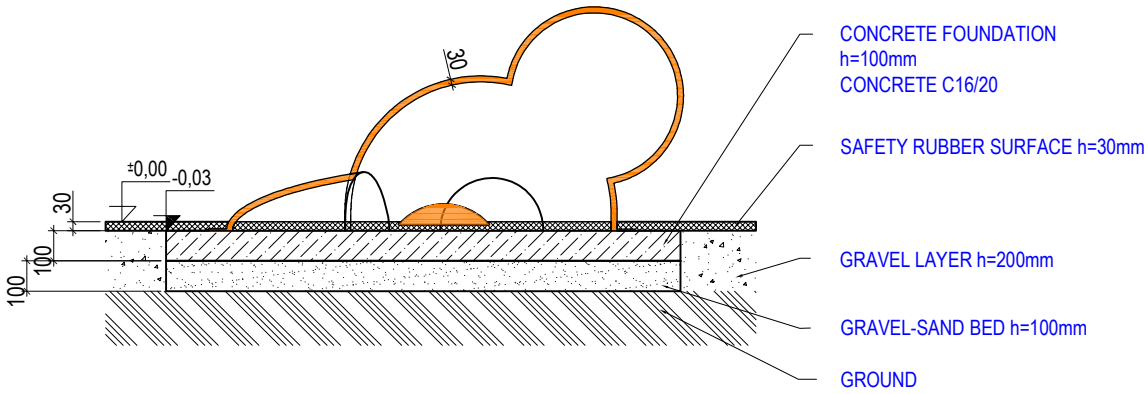

FOUNDATION GROUND PLAN (1:25)

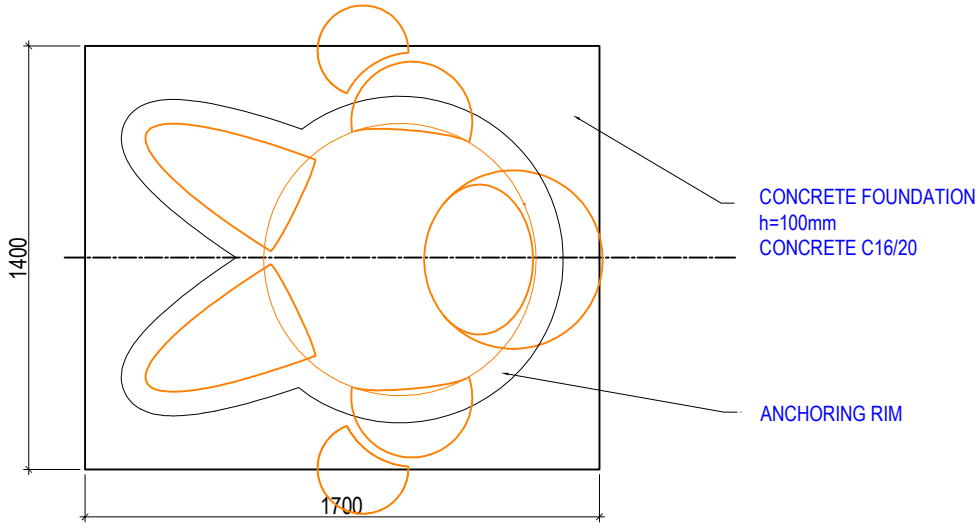

GLUED JOINT DETAIL (1:10)

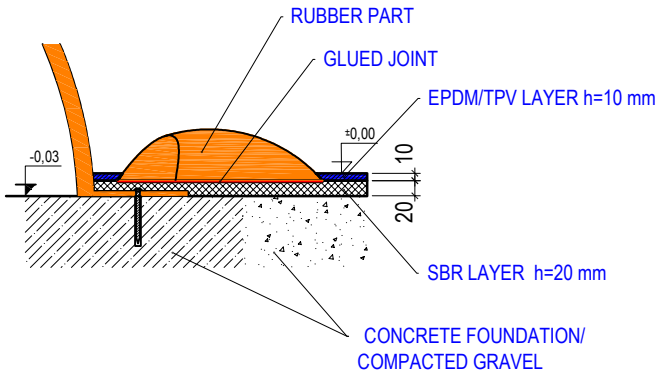

ANCHORING DETAIL (1:10)

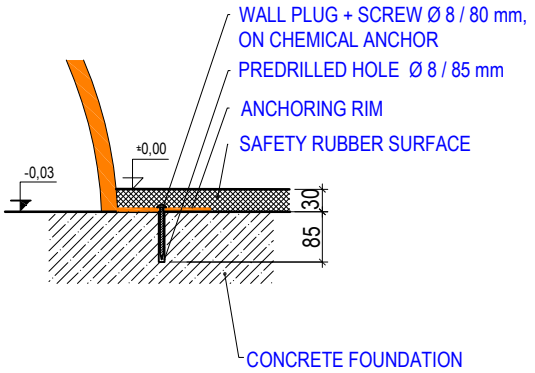

Author:		3D PROGRAM, s.r.o. Objízdná 1911 765 02 Otrokovice, Czech Republic Tel: +420 602 500 045 Email: info@3dprogram.eu	
Daniel Naď			
TECHNICAL DRAWING		Certified according to	EN71 , EN1176
		Date of issue	14.12.2025
M18 - MINI ASTRONAUT		M 1:25, 1:10	format 1xA4
Foundation and anchoring – ground plan, section and details		M18_EN.dwg	revision 0