GROUND PLAN (1:10)

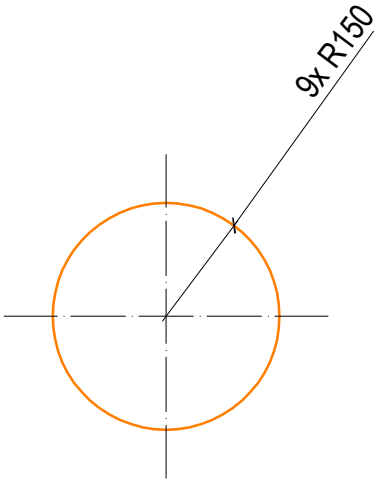

SECTION (1:10)

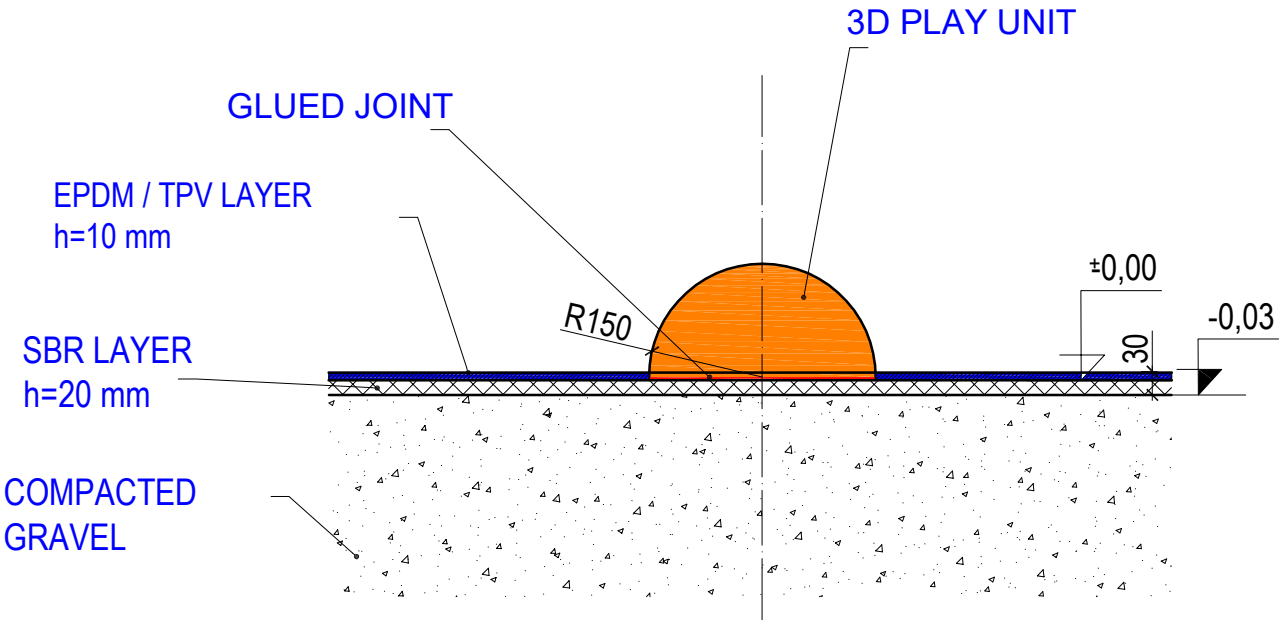

Author:		3D PROGRAM, s.r.o. Objízdná 1911 765 02 Otrokovice, Czech Republic Tel: 602 500 045 Email: info@3dprogram.eu	
Daniel Naď			
TECHNICAL DRAWING		Certified according to	EN71 , EN1176
		Date of issue	02.02.2024
B11 - HALF SPHERE HOPSCOTCH		M 1:10	format 1xA4
Foundation and anchoring - section		B11_EN.dwg	revision 0