SECTION (1:20)

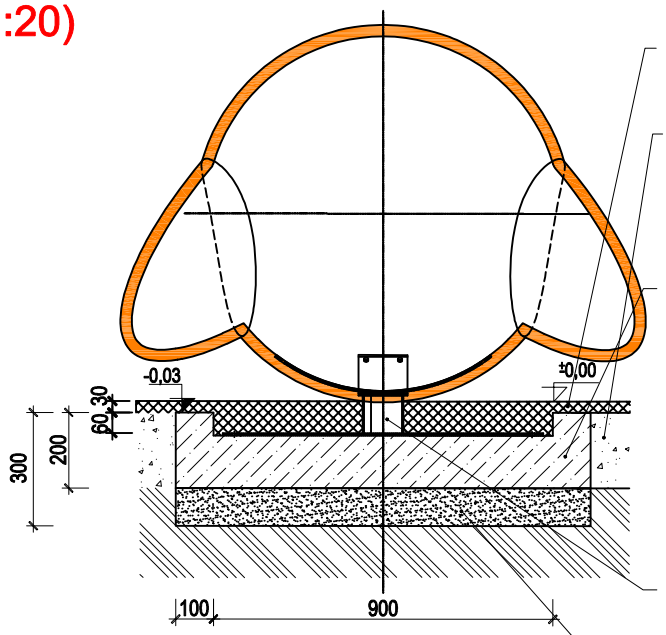

SAFETY RUBBER SURFACE h=30 mm

GRAVEL LAYER h=200 mm

CONCRETE FOUNDATION
1000 × 1000 × 200 mm
WITH 60 mm DEEP RECESS,
OFFSET 100 mm FROM ALL EDGES
CONCRETE C16/20

STEEL TUBE Ø108 / 3,6 mm
WITH STEEL PLATE
850x850x h=10 mm

GRAVEL-SAND BED h=100 mm

GROUND PLAN (1:20)

CONCRETE FOUNDATION
1000 × 1000 × 200 mm
WITH 60 mm DEEP RECESS,
OFFSET 100 mm FROM ALL EDGES
CONCRETE C16/20

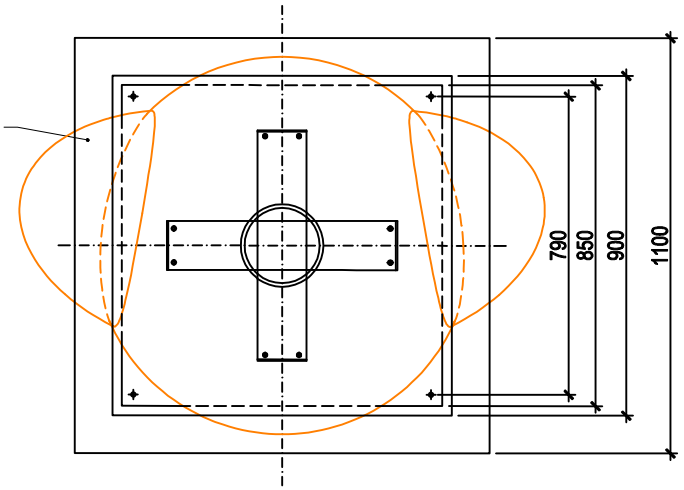

ANCHORING DETAIL (1:4)

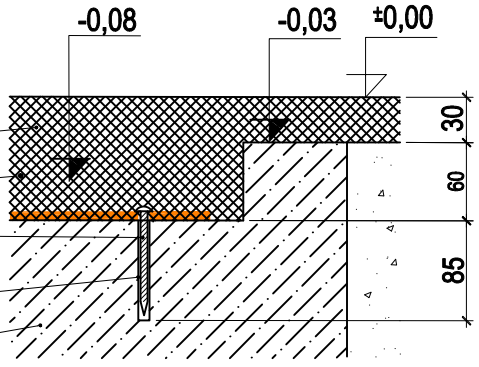

SAFETY RUBBER SURFACE

STEEL PLATE

WALL PLUG + SCREW Ø 8 / 80 mm,
ON CHEMICAL ANCHOR

PREDRILLED HOLE Ø 8 / 85 mm

CONCRETE FOUNDATION

Author:		3D PROGRAM, s.r.o. Objízdná 1911 765 02 Otrokovice, Czech Republic Tel: 602 500 045 Email: info@3dprogram.eu	
Daniel Naď			
TECHNICAL DRAWING		Certified according to	EN71 , EN1176
		Date of issue	12.12.2025
M21 - OWL		M 1:20, 1:4	format 1xA4
Foundation and anchoring - section		M21_EN.dwg	revision 0