PRODUCT SHEET

E04s/26EN

product line **EXTRA**

HILL L
with slide



Product is offered with inox slide

PRODUCT COMPOSITION
fiberglass shell, SBR, EPDM/TPV,
aliphatic PU binder, inox slide,

COLOR COMBINATION
standard: turquoise / pink / beige
(other combination on request)

COLOR STABILITY
UV stable

RECOMMENDED SAFETY SURFACE
rubber surfacing (min. 1500 mm around the product)
or an equivalent shock-absorbing surface compliant
with EN1177

PRODUCT SAFETY
certified according to EN1176
complies with ASTM F1487 and CAN/CSA Z614

INSTALLATION
the product is installed onto a concrete foundation

PACKAGING
wrapped in plastic and delivered
on a pallet 1650 x 2100 mm

STORAGE
in original packaging on a pallet
in temperatures between - 40° C and 50° C

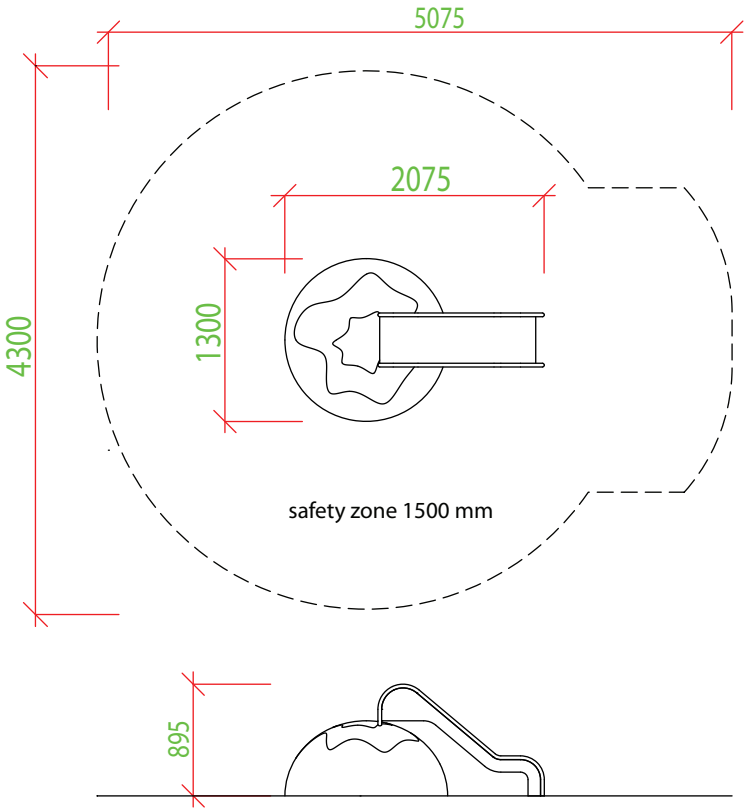

Our products are handmade, please allow dimensional tolerance up to 40 mm

120 kg weight	600 mm critical fall height	1 h assembly time	2 - 10 yrs users' age	3 max. number of users	2075 x 1300 x 895 mm dimensions

3D PROGRAM, s.r.o.
Objízdná 1911
Otrokovice 765 02
Czech Republic

www.3dprogram.eu
info@3dprogram.eu
+420 602 500 045 +420 577 700 718

MADE IN EU

3D PROGRAM®