GROUND PLAN

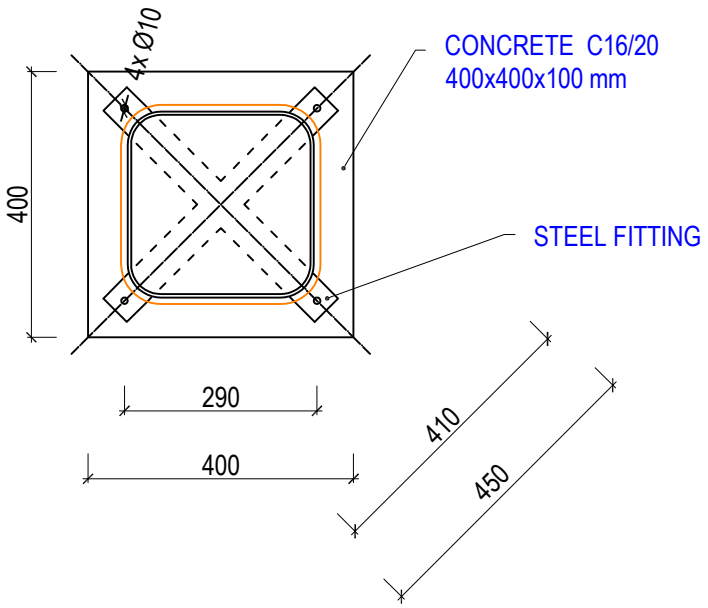

SECTION

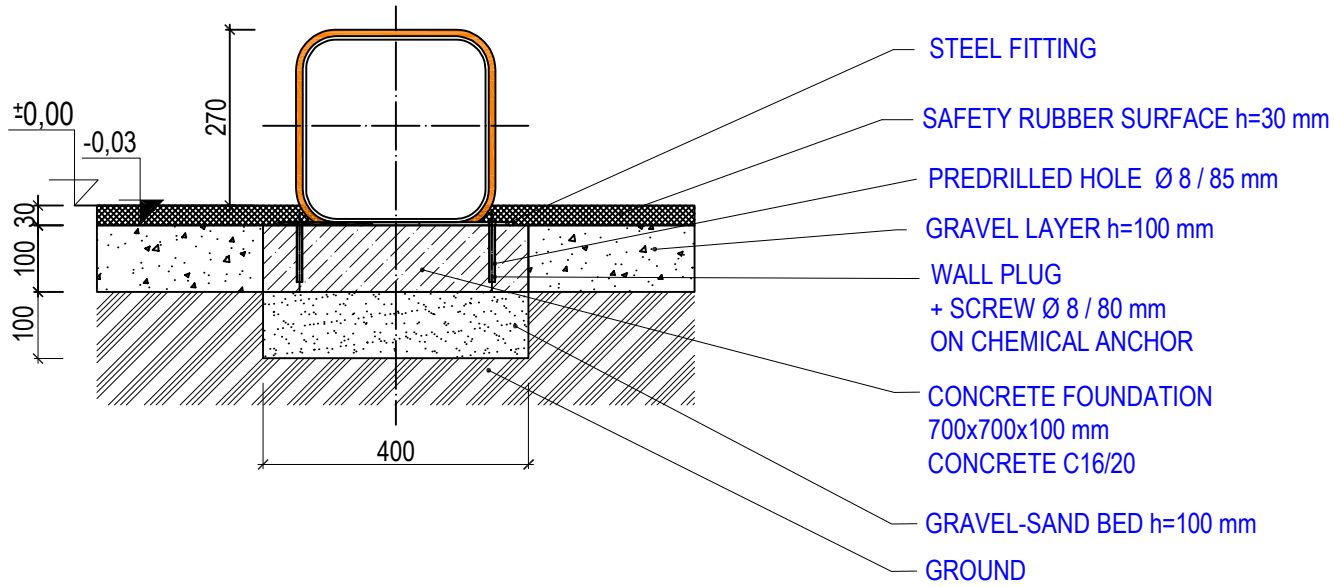

Author:		3D PROGRAM, s.r.o. Objízdná 1911 765 02 Otrokovice Tel: 602 500 045 Email: info@3dprogram.eu	
Daniel Naď			
TECHNICAL DRAWING		Certified according to	EN71 , EN1176
		Date of issue	15.12.2025
B05-3 - DIDACTIC CUBE		M 1:10	format 1xA4
Foundation and anchoring - ground plan and section		B05-3_EN.dwg	revision 0