PRODUCT SHEET

E05/21EN

product line **EXTRA**

FOX BURROW

with tube and climbing wall



Product is offered with PP tube Ø800 mm

PRODUCT COMPOSITION

fiberglass shell, SBR, EPDM/TPV,
aliphatic PU binder, PP tube,
PU climbing holds

COLOR COMBINATION

standard: light green / brown / black
(other combination on request)

COLOR STABILITY

UV stable

RECOMMENDED SAFETY SURFACE

rubber surfacing (min. 1500 mm around the product)
or an equivalent shock-absorbing surface compliant
with EN1177

PRODUCT SAFETY

certified according to EN1176
complies with ASTM F1487 and CAN/CSA Z614

INSTALLATION

the product is installed onto a concrete foundation

PACKAGING

wrapped in plastic and delivered
on a pallet 2100 x 2100 mm

STORAGE

in original packaging on a pallet
in temperatures between - 40° C and 50° C

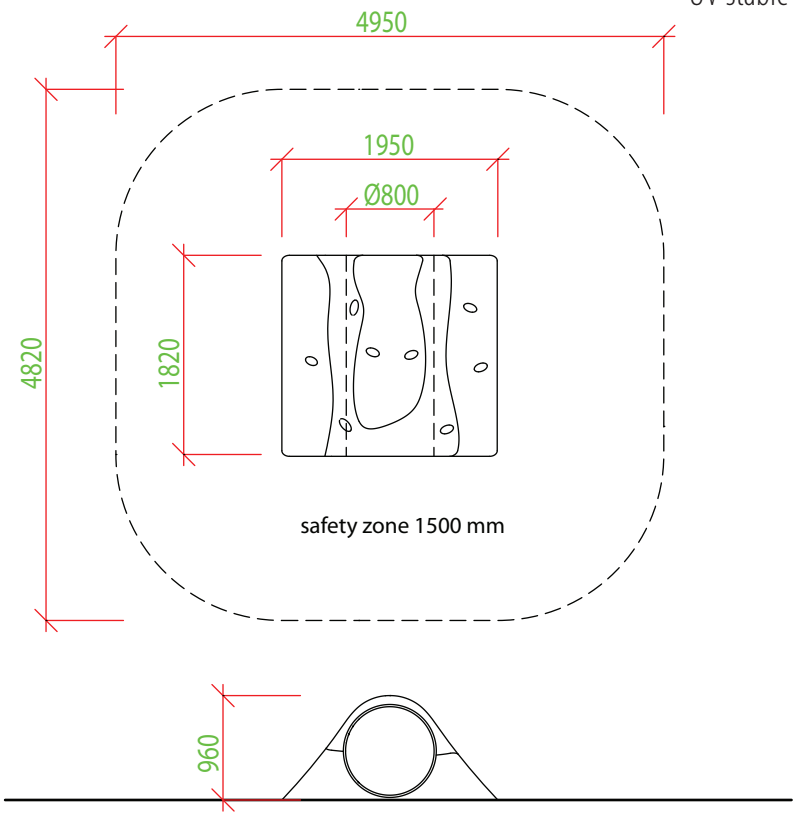

Our products are handmade, please allow dimensional tolerance up to 40 mm

weight	critical fall height	assembly time	users´ age	max. number of users	dimensions
1200 kg	960 mm	2 h	2 - 10 yrs	3	1950 x 1820 x 960 mm

3D PROGRAM, s.r.o.
Objízdná 1911
765 02 Otrokovice
Czech Republic

www.3dprogram.eu
info@3dprogram.eu
+420 602 500 045 +420 577 700 718

MADE IN EU

3D PROGRAM®